RL127

High Brightness White LED Ring Light

- Intense illumination in a compact (4.6” diameter) housing
- IP65 Compliant Design
- Axial light source designed for inspecting non-specular objects

Ordering Information

Standard Product:
Shipped Next Day

RL127-WHIIC

Configured with inline Current Source

RL127-WHIC5

Configured for use with the Pulsar 320

Standard Product Variation:
Shipped Within Two Weeks

		Spectral wavelength	Optional power compatibility	Optional Light Conditioning	Alternative Connector
RL127	-	XXX	XX	X	XXX
		(white) WHI	IC IS C2 C3 C5 24	P (Diffuser) D (Polarizer)	M12* (male)

IC = iCS (requires 24v power supply)
IS = iSU (requires 24v power supply)
C2 = Ai Connector
C5 = Pulsar 320 Connector
* Available with IC, IS, and 24v options only

Dimensional Information

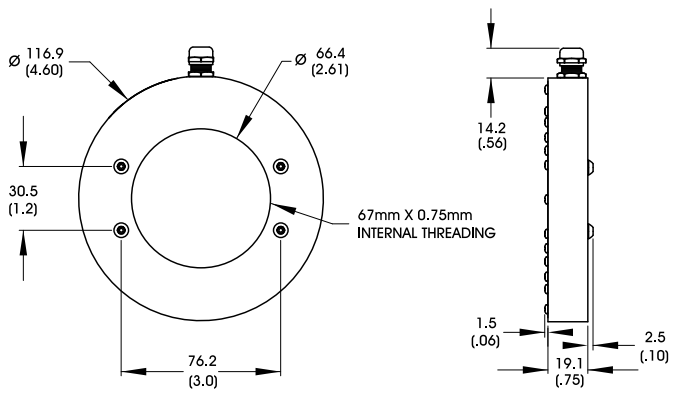

Click for Installation Models & Drawings

The RL127 can be mounted using brackets: LB101, LB103, or LB105 (not included)

Click for Brackets Spec Sheet

Current Specifications

	white
@24	320 mA

Standard Product Information

Weight:	304 g (11 oz.)
Finish:	Black Anodized
Operating Temperature:	0-60° C
Meets Specifications:	CE, RoHS
Product Lifetime:	50,000 hours